LONG SEAMS	
COURSE	ORIENTATION
1	90°

Ship loose items:
(1 QTY.) S1 PIPE T.O.E

NOTE: NOZ. S1 TO BE WELDED ON SITE.

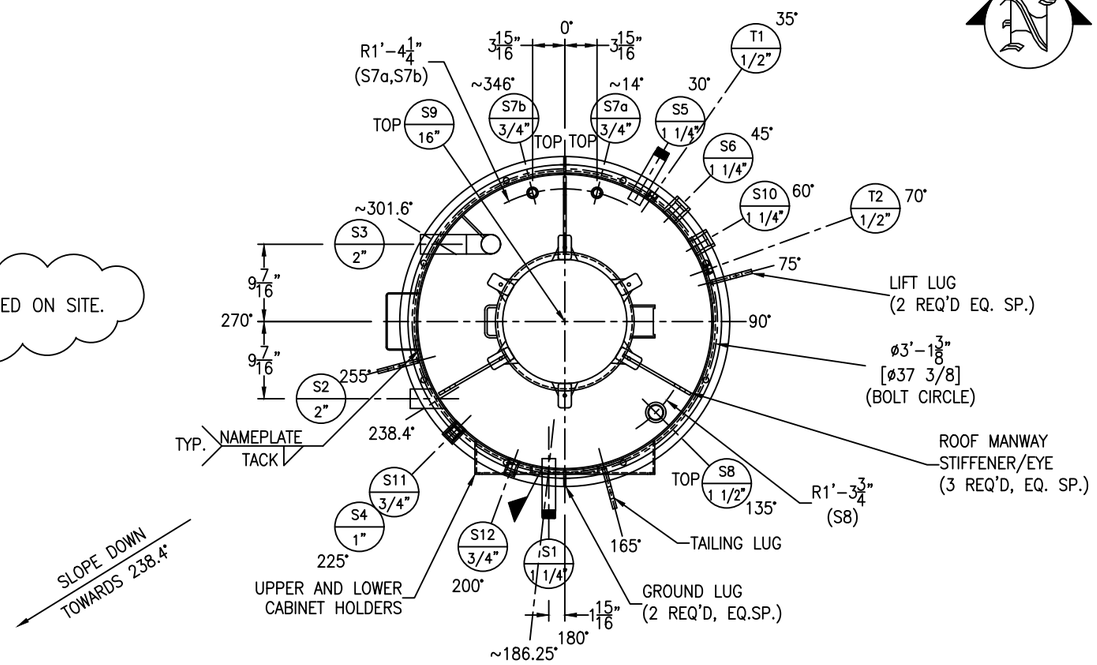

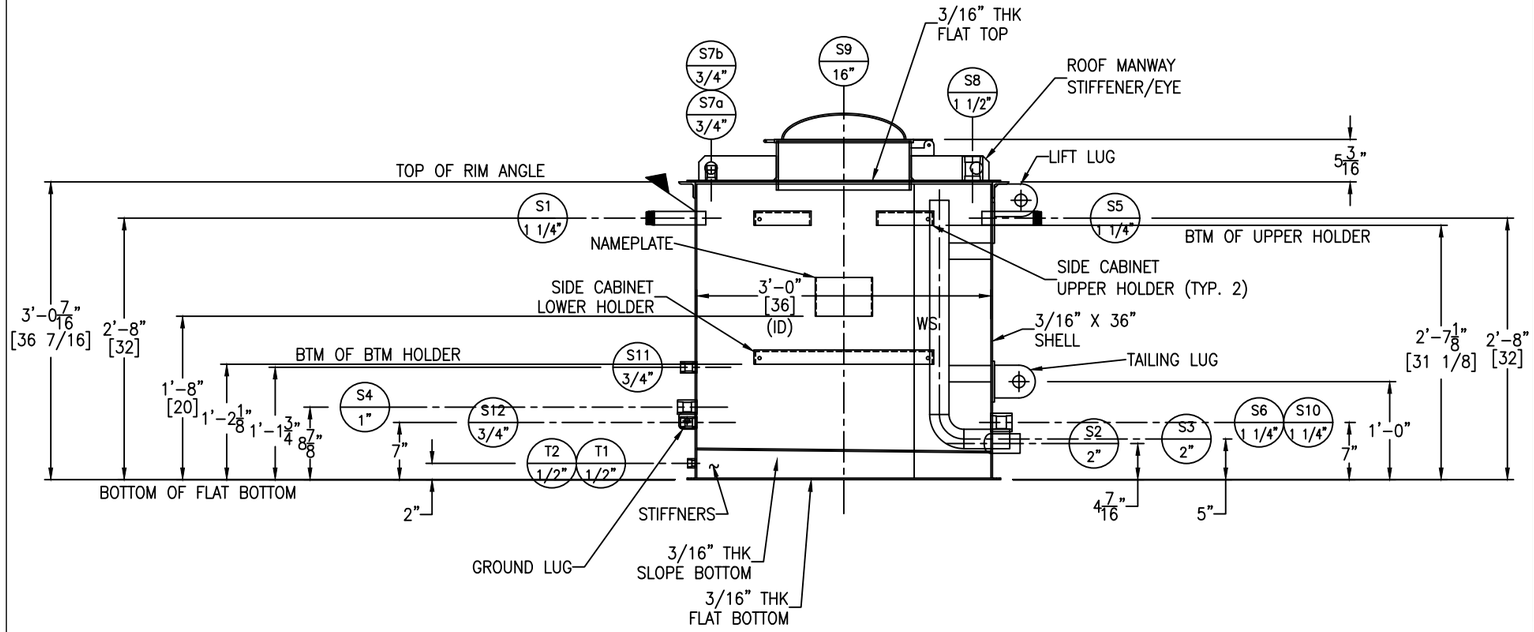

GM-02 GT-11

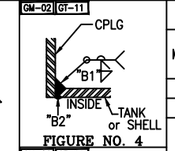

FIGURE NO. 4

GM-02 GT-11

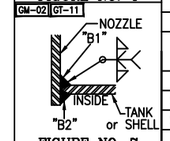

FIGURE NO. 7

GM-02 SA-30

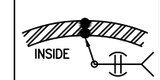

SHELL THK. < 5/16"

FIGURE NO. 9

GM-02 SA-30

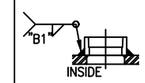

HALF CPLG TO SHELL
FIGURE NO. 12

NOZZLE SCHEDULE

MARK	SERVICE	SIZE	RATING	TYPE / STYLE	NECK SCHED.	PROJECTION EXT. (℄)	PROJECTION INT. (MIN.)	WELD FIGURE	REPAD SIZE (WIDTH X THK.)	WELD SIZE "A1"	"A2"	"B1"	"B2"	"C1"	"C2"
S1	PROCESS INLET	1 1/4"	–	T.O.E PIPE	80S	SEE DWG	1"	7	–	–	–	1/4	1/4	–	–
S2	DRAIN	2"	–	PIPE	80S	SEE DWG	–	4	–	–	–	1/4	1/8	–	–
S3	OVERFLOW	2"	–	PIPE W/ ELBOW	80S	SEE DWG	SEE DWG 1	7	–	–	–	1/4	1/8	–	–
S4	PROCESS INLET	1"	3000#	FULL THRD. CPLG.	–	–	–	4	–	–	–	1/4	1/8	–	–
S5	BLIND FLANGE	1 1/4"	–	T.O.E PIPE	80S	6" 1	1" 1	7 1	–	–	–	1/4	1/8	–	–
S6	PROCESS OUTLET	1 1/4"	3000#	FULL THRD. CPLG.	–	–	–	4	–	–	–	1/4	1/8	–	–
S7a	PROCESS OUTLET	3/4"	3000#	FULL THRD. CPLG.	–	–	–	4	–	–	–	3/16	1/8	–	–
S7b	PROCESS OUTLET	3/4"	3000#	FULL THRD. CPLG.	–	–	–	4	–	–	–	3/16	1/8	–	–
S8	VENT	1 1/2"	3000#	FULL THRD. CPLG.	–	–	–	4	–	–	–	3/16	1/8	–	–
S9	MANWAY	16"	–	BETTS MANWAY	1/4"	SEE DWG	1"	7	–	–	–	1/4	1/4	–	–
S10	PROCESS OUTLET	1 1/4"	3000#	FULL THRD. CPLG.	–	–	–	4	–	–	–	1/4	1/8	–	–
S11	PRESSURE TRANSMITTER	3/4"	3000#	FULL THRD. CPLG.	–	–	–	4	–	–	–	1/4	1/8	–	–
S12	TEMP. TRANSMITTER	3/4"	3000#	FULL THRD. CPLG.	–	–	–	4	–	–	–	1/4	1/8	–	–
T1	TEST COUPLING	1/2"	3000#	HALF THRD. CPLG.	–	–	–	12	–	–	–	1/4	–	–	–
T2	TEST COUPLING	1/2"	3000#	HALF THRD. CPLG.	–	–	–	12	–	–	–	1/4	–	–	–

MATERIALS OF CONSTRUCTION

	VESSEL
SHELL	SA240-304/304L
FLAT TOP	SA240-304/304L
RIM ANGLE	SA479-304/304L
FLAT/SLOPE BOTTOM	SA240-304/304L
NOZZLE NECKS	SA312-304/304L WLD & SA403-304/304L WPB
NOZZLE FLANGES	–
BETTS MANWAY NECKS	SS316
BETTS MANWAY FLANGES	SS316
BETTS GASKETS	BUNA-N
BOLTS/STUDS	–
NUTS	–
REPADS	SA240-304/304L
COUPLINGS/PLUGS	SA182F-304/304L
SUPPORTS/HOLD DOWNS	SA240-304/304L
LIFTING/TAILING LUGS	SA240-304/304L
STIFFENERS	SA240-304/304L
SIDE CABINET HOLDERS	SA240-304/304L
GROUND LUG	SA240-304/304L
ROOF MANWAY STIFFENER/EYE	SA240-304/304L
LADDER	–
TANK CLIPS (LADDER)	–
HANDRAIL	–
HANDRAIL CLIPS	–
PLATFORM	–
PLATFORM CLIPS	–
DIPTUBE SUPPORT	–
JACKET SHELL	–
JACKET HEADS	–
JACKET NOZZLE NECKS	–

DESIGN DATA

	VESSEL
DESIGN AND FAB. CODE	API650 (AS APPLICABLE)
CERT. STAMP REQ'D.	NO
DESIGN PRESSURE	ATM
DESIGN TEMPERATURE	212° F
MIN. DESIGN METAL TEMP.	-20° F @ ATM
OPERATING PRESSURE	ATM
OPERATING TEMPERATURE	90° F
JOINT EFFICIENCY HEADS	0.70
JOINT EFFICIENCY SHELL	0.70
CORROSION ALLOWANCE	0"
SPECIFIC GRAVITY	1.0
EARTHQUAKE ZONE	Ss = (0.526) S1 = (0.23)
WIND LOAD	99 MPH
STRESS RELIEF	NOT REQ'D
RADIOGRAPHIC EXAM	NOT REQ'D
DYE PENETRANT EXAM	NOT REQ'D
MAGNETIC PARTICLE EXAM	NOT REQ'D
HYDROSTATIC TEST	NOT REQ'D
PNEUMATIC TEST	2 PSIG / GAUGE#1
JKT HYDRO TEST	–
JKT DESIGN AND FAB. CODE	–
JKT CERT. STAMP REQ'D.	–
JKT DESIGN PRESSURE	–
JKT DESIGN TEMPERATURE	–
JKT MIN. DESIGN METAL TEMP.	–
JKT OPERATING PRESSURE	–
JKT OPERATING TEMPERATURE	–
JKT JOINT EFFICIENCY HEADS	–
JKT JOINT EFFICIENCY SHELL	–

VESSEL FINISH

INTERIOR WELD TREATMENT:	SAV TANK STANDARD
EXTERIOR WELD TREATMENT:	SAV TANK STANDARD
SAV TANK FINISHING STANDARD:	SEE NOTE 6
INSULATION:	N/A
PAINTING:	N/A

VESSEL CAPACITY AND WEIGHTS

OPERATING CAPACITY	111 GAL.
FULL CAPACITY	140 GAL.
EMPTY SHIPPING WEIGHT	700 LBS.
WEIGHT FULL OF WATER	1,900 LBS.
WEIGHT FULL OF PRODUCT	1,900 LBS.

QUALITY CONTROL

ENG. _____ DATE: _____

Q.C. _____ DATE: _____

This drawing is issued for customer approval. please review, make approval changes (if any) in red. check the appropriate box, sign & date.

- ☐ Approval – no changes. Please proceed with fabrication.
- ☐ Approved as noted. Please proceed with fabrication
- ☐ Not approved. Please make changes and resubmit.

Customer signature _____ Date _____

GENERAL NOTES

1.) COVER ALL FLANGES, OPENINGS & MACHINED SURFACES PRIOR TO SHIPMENT UNLESS OTHERWISE NOTED.
2.) BOLT HOLES TO STRADDLE 0° & 180° UNLESS OTHERWISE NOTED.
3.) NOZZLE REPADS TO HAVE (1) ø1/4" TELL-TALE HOLES ON HORIZONTAL CENTER LINE.
ALL OTHER REPADS TO HAVE (1) ø1/4" WEEP HOLE AT LOWEST POINT ON PAD.
4.) MANUFACTURING TOLERANCE TO BE IN ACCORDANCE WITH API STANDARD 650 7.5.
5.) ASME MATERIALS TO CONFORM TO THE FOLLOWING: FLANGES – B16.5, FITTINGS – B16.9 & COUPLINGS – B16.11.
6.) PICKLE ALL EXTERIOR WELDS. PASSIVATE INTERIOR & EXTERIOR OF VESSEL.

REVISIONS

REV	D.BY	C.BY	DATE	DESCRIPTION
2				AS BUILT
1	AD	–	6/27/25	CERTIFIED
0	AD	RS	5/6/25	APPROVAL

Savannah Tank & Equipment Corp.
1517 Telfair Road, Savannah, GA 31415
(912) 233-8902

DRAWN BY: AD
CHK'D BY: RS
APPROVED BY: NP
SCALE: 1" = 1'-0"

KIMBERLY CLARK
SEAL WATER SURGE TANK
EQUIP. #220-TK-22112
CUST. PO #C000139275

DRAWING NO.: 010-25-1 SHT 1 OF 4 REV. SET 1

GM-02

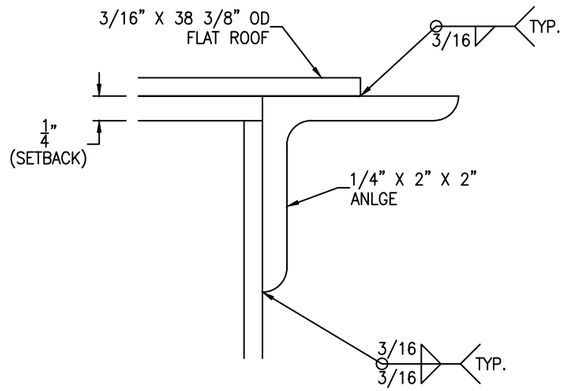

RIM ANGLE DETAIL

SCALE: 1'-0" = 1'-0"

FC-14

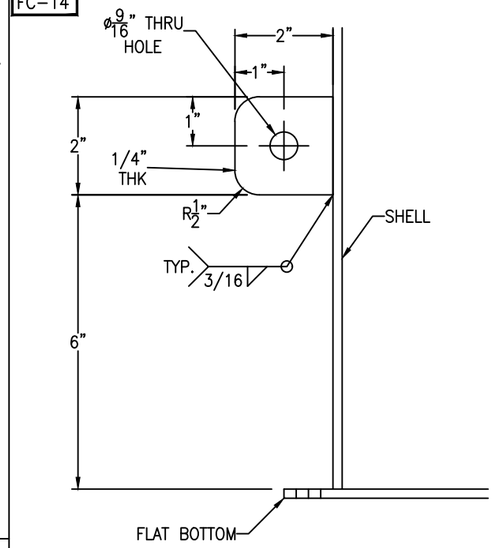

GROUND LUG IS LOCATED @ 0° AND 180°

GROUND LUG DETAIL

(2 REQ'D) SCALE: 6" = 1'-0"

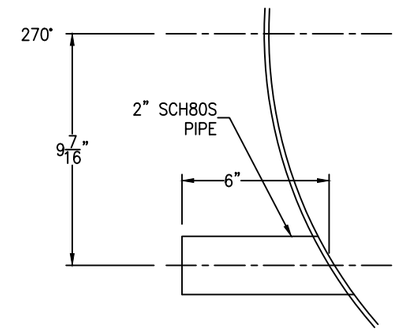

NOZZLE S2 DETAIL

SCALE: 3" = 1'-0"

FC-14

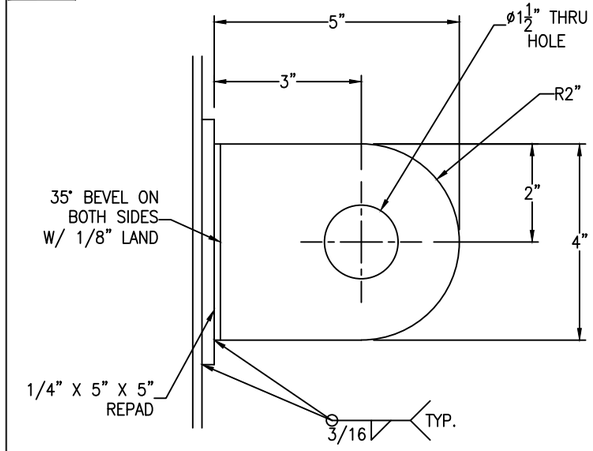

TANK WT. <= 5000#

SHACKLE PIN DIA. = 1"

TAILING LUG DETAIL

SCALE: 3" = 1'-0"

FC-14

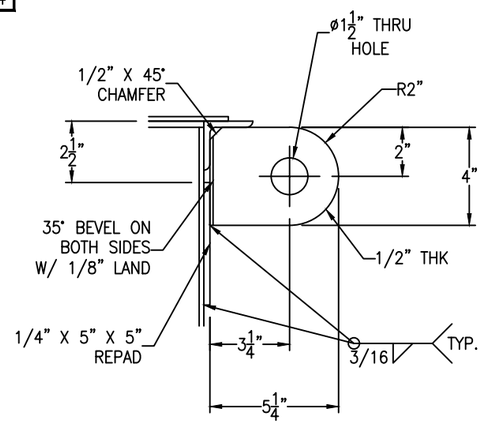

TANK WT. <= 5000#

SHACKLE PIN DIA. = 1"

LIFT LUG DETAIL

(2 REQ'D) SCALE: 3" = 1'-0"

TO BE WELDED ON SITE

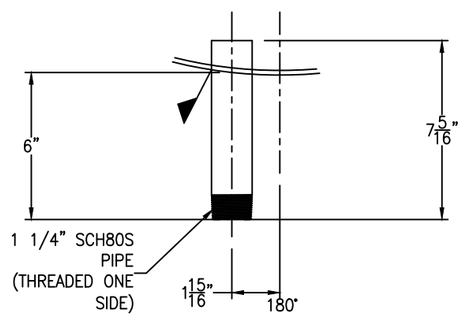

NOZZLE S1 DETAIL

SCALE: 3" = 1'-0"

FC-14

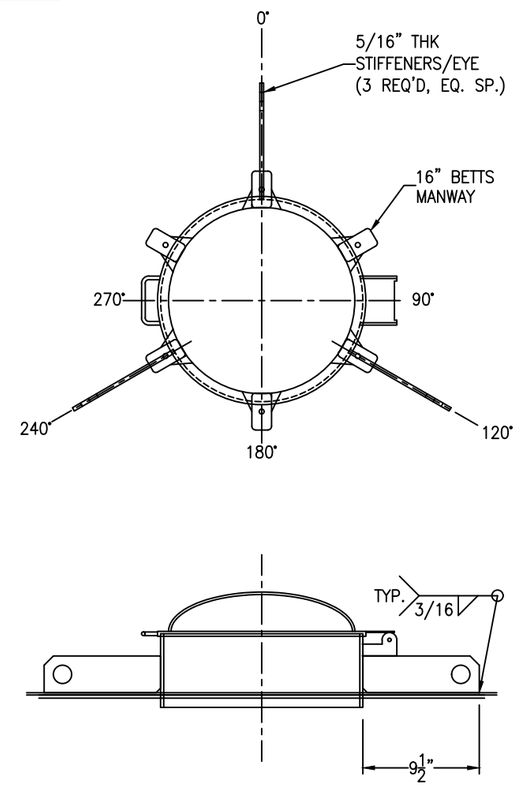

ROOF MANWAY STIFFENER DETAIL

SCALE: 1 1/2" = 1'-0"

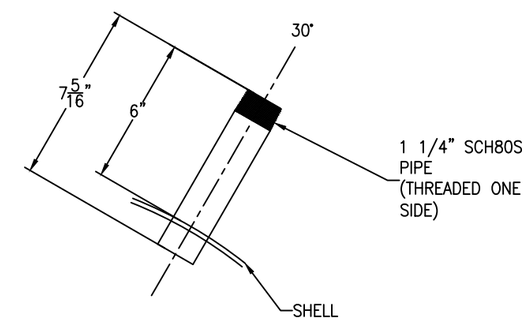

⚠NOZZLE S5 DETAIL

SCALE: 3" = 1'-0"

GM-02

HOLES ON FLAT BOTTOM @
22.5°, 67.5°, 112.5, 157.5,
202.5°, 247.5°, 292.5°, 337.5°,

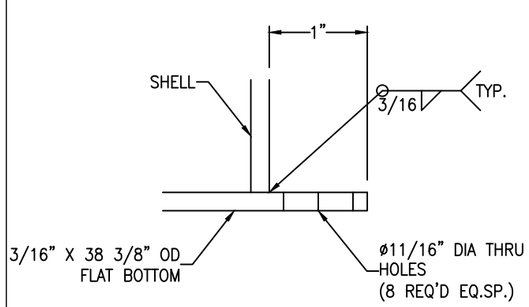

FLAT BOTTOM DETAIL

SCALE: 1'-0" = 1'-0"

FC-14

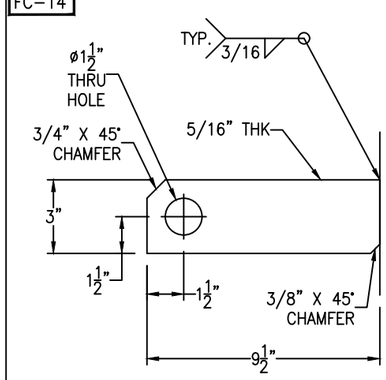

ROOF MANWAY STIFFENER/EYE DETAIL

(3 REQ'D) SCALE: 3" = 1'-0"

REV	D.BY	C.BY	DATE	DESCRIPTION
2				AS BUILT
1	AD	–	6/27/25	CERTIFIED
0	AD	RS	5/6/25	APPROVAL

⚠ REVISIONS

Savannah Tank & Equipment Corp.
1517 Telfair Road, Savannah, GA 31415
(912) 233-8902

DRAWN BY:	AD
CHK'D BY:	RS
APPROVED BY:	NP
SCALE:	1" = 1'-0"

KIMBERLY CLARK
SEAL WATER SURGE TANK
EQUIP. #220-TK-22112
CUST. PO #C000139275

DRAWING NO.: 010-25-2 | SHT 2 OF 4 | REV. SET 1

FC-14

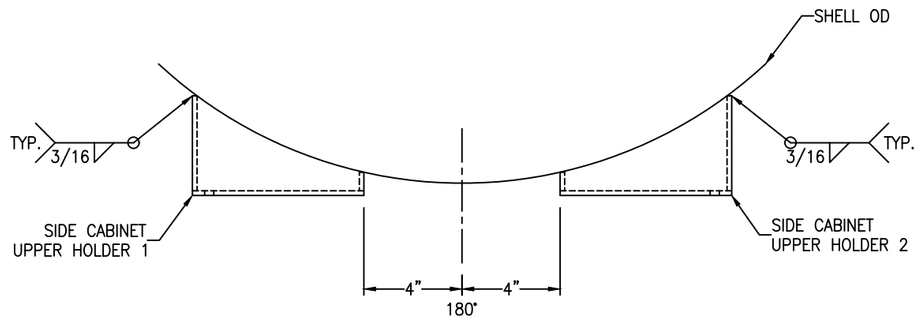

SIDE CABINET UPPER HOLDER DETAIL

SCALE: 3" = 1'-0"

FC-14

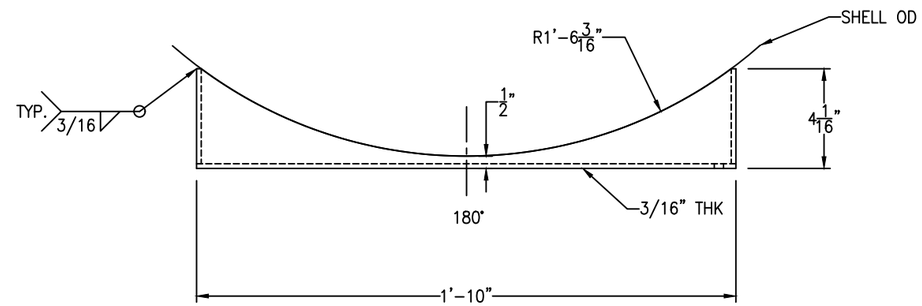

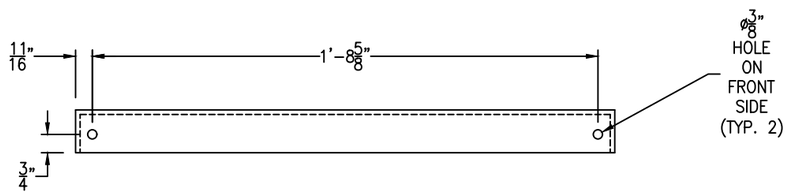

SIDE CABINET LOWER HOLDER DETAIL

SCALE: 3" = 1'-0"

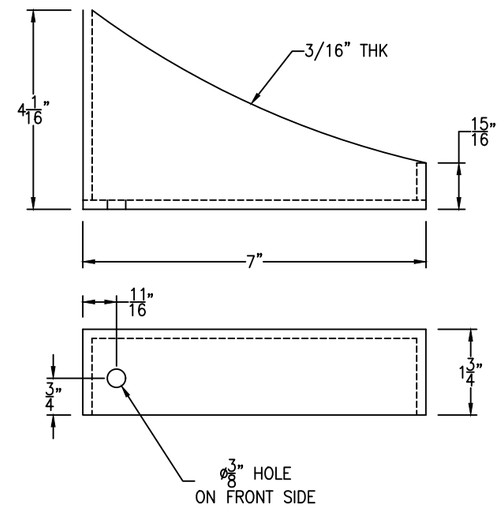

SIDE CABINET UPPER HOLDER 1 DETAIL

SCALE: 6" = 1'-0"

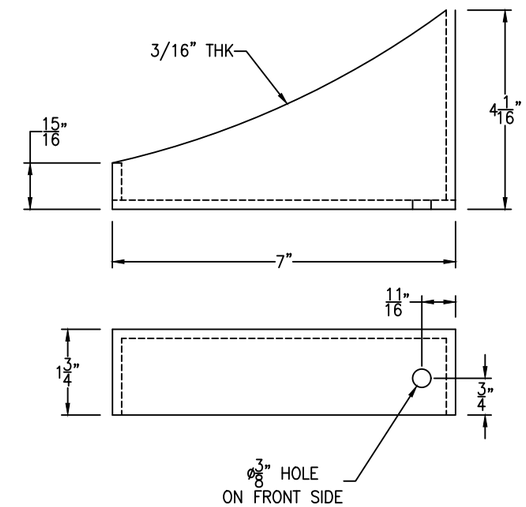

SIDE CABINET UPPER HOLDER 2 DETAIL

(2 REQ'D) SCALE: 6" = 1'-0"

SEE SHEET 1 FOR CABINET HOLDER ELEVATION

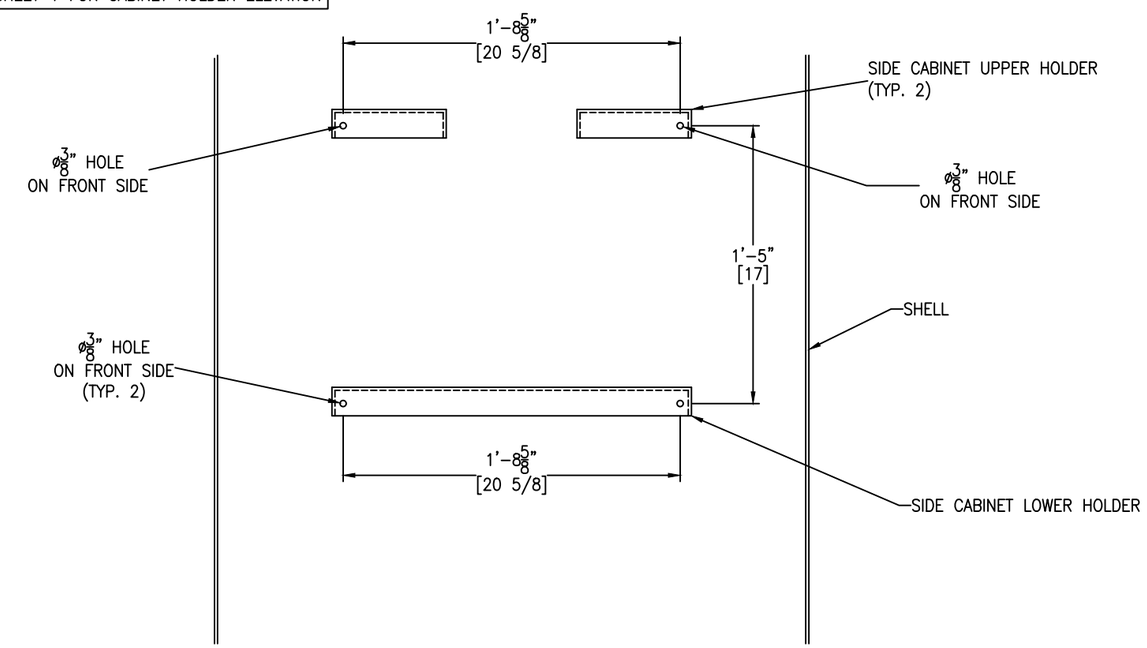

CABINET HOLDER HOLE DETAIL

SCALE: 2" = 1'-0"

REV	D.BY	C.BY	DATE	DESCRIPTION
2				AS BUILT
1	AD	–	6/27/25	CERTIFIED
0	AD	RS	5/6/25	APPROVAL

⚠ REVISIONS

Savannah Tank & Equipment Corp.
1517 Telfair Road, Savannah, GA 31415
(912) 233-8902

DRAWN BY: AD
CHK'D BY: RS
APPROVED BY: NP
SCALE: 1" = 1'-0"

KIMBERLY CLARK
SEAL WATER SURGE TANK
EQUIP. #220-TK-22112
CUST. PO #C000139275

DRAWING NO.: 010-25-2 SHT 3 OF 4 REV. SET 1

FC-14

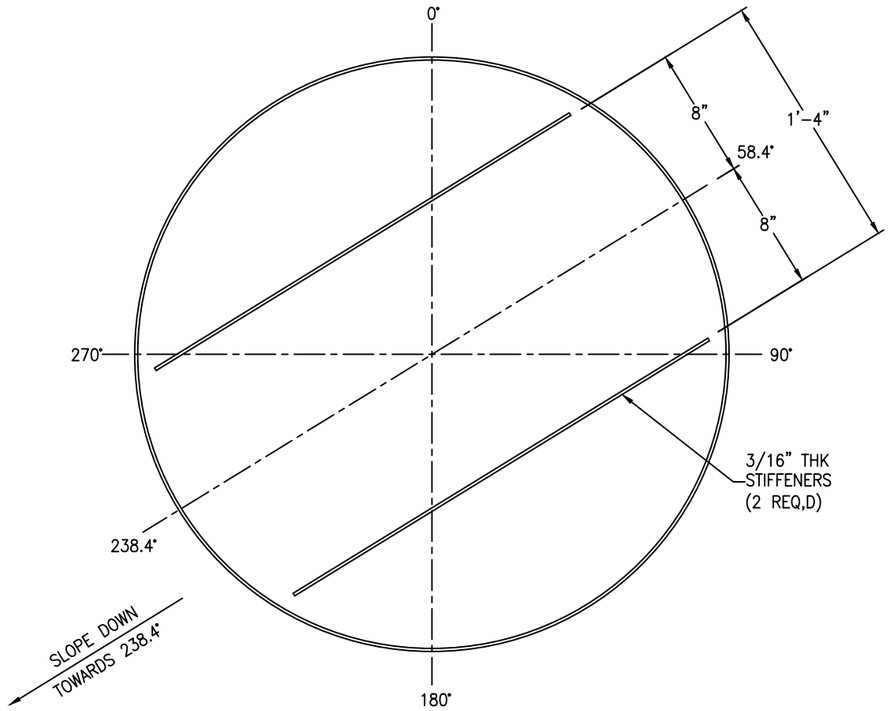

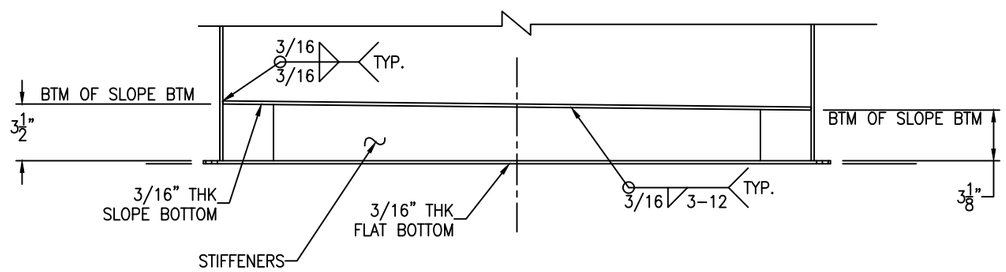

SLOPE BOTTOM DETAIL

SCALE: 2" = 1'-0"

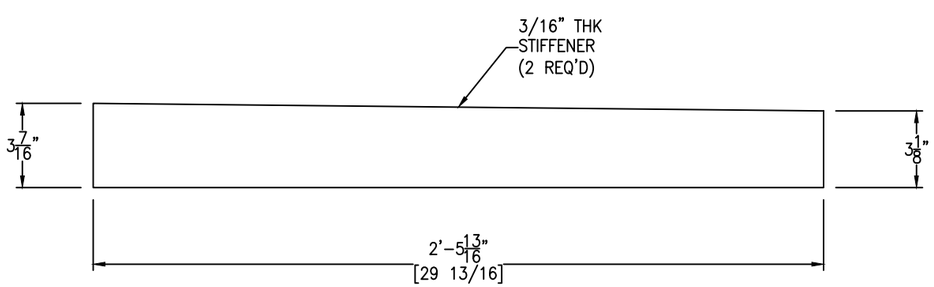

STIFFENER DETAIL

(2 REQ'D) SCALE: 3" = 1'-0"

FC-14

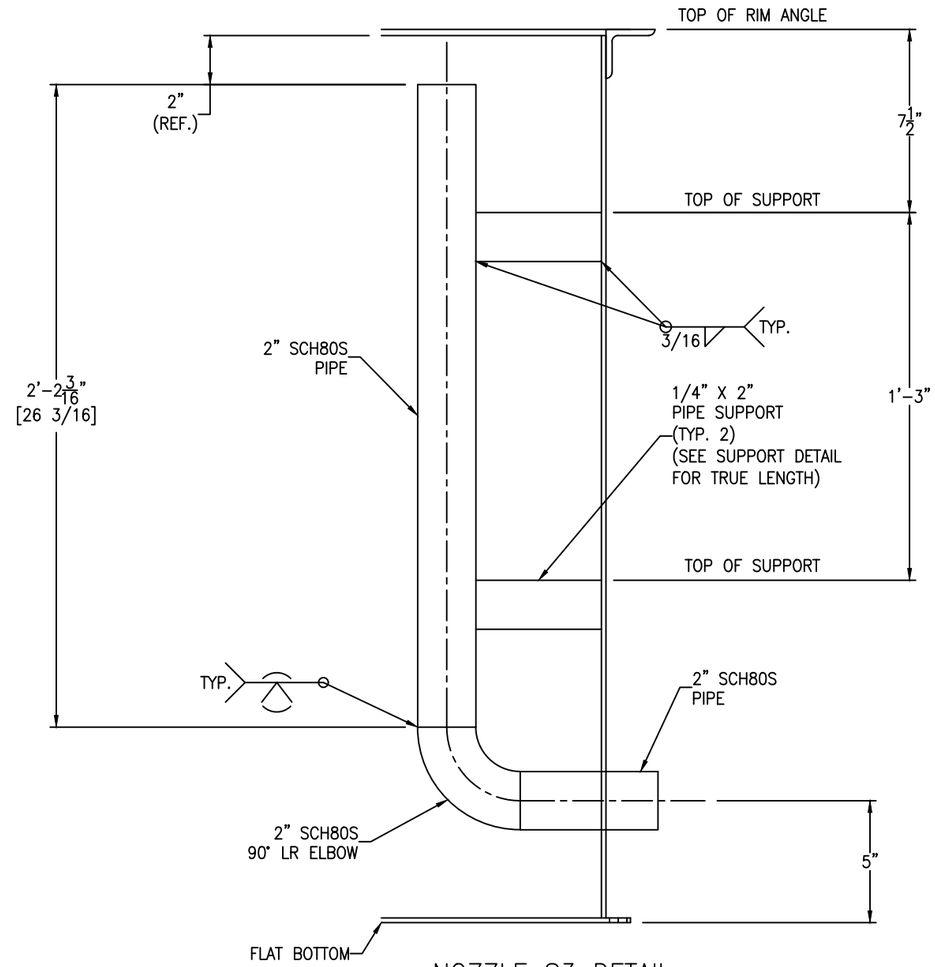

NOZZLE S3 DETAIL

SCALE: 3" = 1'-0"

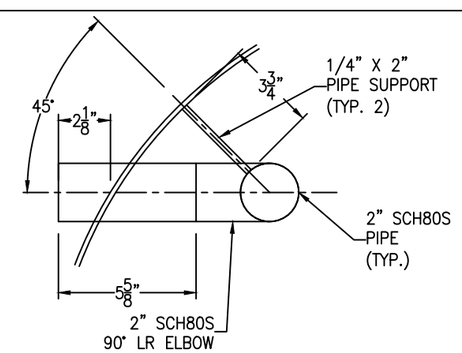

NOZZLE S3 SUPPORT DETAIL

SCALE: 3" = 1'-0"

REV	D.BY	C.BY	DATE	DESCRIPTION
2				AS BUILT
1	AD	–	6/27/25	CERTIFIED
0	AD	RS	5/6/25	APPROVAL

REVISIONS

Savannah Tank & Equipment Corp.
1517 Telfair Road, Savannah, GA 31415
(912) 233-8902

DRAWN BY: AD
CHK'D BY: RS
APPROVED BY: NP
SCALE: 1" = 1'-0"

KIMBERLY CLARK
SEAL WATER SURGE TANK
EQUIP. #220-TK-22112
CUST. PO #C000139275

DRAWING NO.: 010-25-3 SHT 4 OF 4 REV. SET 1